Cleco® Production Tools

# Product Specifications

# 30ESN26FC3

## INLINE CORDED NUTRUNNER

5.1 - 26 Nm (3.7 – 19.1 ft·lbs)

**INLINE - 30 SERIES**

**The NeoTek™ fastening system is the next generation of smart tool solutions.** The lightweight, ergonomic design along with fully programmable features such as the high-output LED light rings, audible alerts, and handle vibration all create a better user experience that leads to decreased operator fatigue and increased productivity.

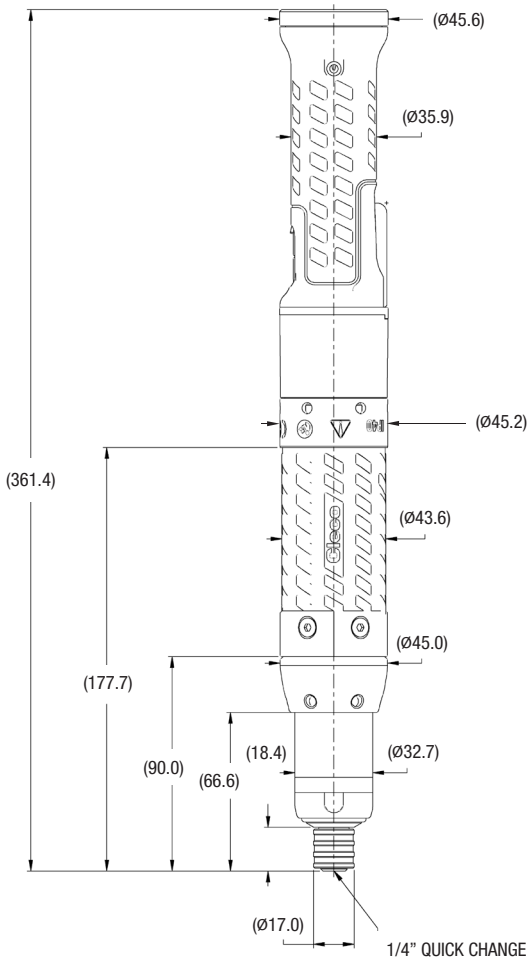


## FEATURES

- 1 million cycles maintenance-free*
- Repeatability & accuracy with 2.0 Cm/Cmk at +/- 7%
- 21% lighter (tool/cable system) than existing tool family
- Digital communication for reliable performance
- Internal temperature monitoring
- Configurable LED light rings
- Data logging with on-board tool memory
- Preventive maintenance alerts

## SPECIFICATIONS

### TORQUE RANGE (Nm)

Min / Max: 5.1 / 26

### TORQUE RANGE (ft·lb)

Min / Max: 3.7 / 19.1

### SPEED

r/min: 750

### WEIGHT & DIMENSIONS

| | |
|---|---|
| Weight | 1.06 kg / 2.34 lb |
| Length | 357 mm / 14.05 in |
| Side to Center | 16.3 mm / 0.64 in |
| Output Drive | 3/8" Sq. Drive |
| Country of Origin: | Assembled in USA |

CE

*based on recommended tool model torque range and clockwise rotation

**Apex Tool Group, LLC**
Phone: +1 (800) 845-5629
Phone: +1 (919) 387-0099
Phone: +49 (0)7363 81-0
www.ClecoTools.com / www.ClecoTools.de