Cleco® Production Tools

Product Specifications

50ESN65HD4

INLINE CORDED NUTRUNNER

14 - 66 Nm (10.3 – 48.6 ft·lbs)

INLINE - 50 SERIES

The NeoTek™ fastening system is the next generation of smart tool solutions. The lightweight, ergonomic design along with fully programmable features such as the high-output LED light rings, audible alerts, and handle vibration all create a better user experience that leads to decreased operator fatigue and increased productivity.

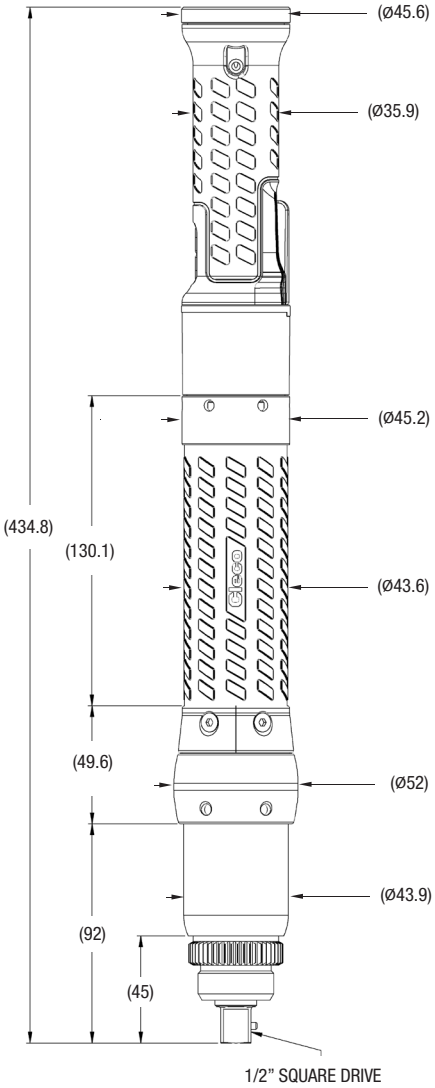

FEATURES

- 1 million cycles maintenance-free*
- Repeatability & accuracy with 2.0 Cm/Cmk at +/- 7%
- 21% lighter (tool/cable system) than existing tool family
- Digital communication for reliable performance
- Internal temperature monitoring
- Configurable LED light rings
- Data logging with on-board tool memory
- Preventive maintenance alerts

SPECIFICATIONS

TORQUE RANGE (Nm)

Min / Max: 14 / 66

TORQUE RANGE (ft·lb)

Min / Max: 10.3 / 48.6

SPEED

r/min: 900

WEIGHT & DIMENSIONS

Weight	1.90 kg / 4.19 lb
Length	435 mm / 17.12 in
Side to Center	22.0 mm / 0.86 in
Output Drive	1/2" Sq. Drive

Country of Origin: Assembled in USA

CE

*based on recommended tool model torque range and clockwise rotation

Apex Tool Group, LLC
Phone: +1 (800) 845-5629
Phone: +1 (919) 387-0099
Phone: +49 (0)7363 81-0
www.ClecoTools.com / www.ClecoTools.de

Cleco® Production Tools