Cleco®
Production Tools

Parts Manual
SP12-1125
2021-06

CellClutch™

Cell Clutch Series
Battery Clutch Assembly Tool

For additional product information visit our website at http://www.ClecoTools.com

Copyright © Apex Tool Group, 2020

No part of this document may be reproduced in any way or in any form, in whole or in part, or in a natural or machine-readable language, or transmitted on electronic, mechanical, optical, or other media, without the express permission of the Apex Tool Group.

Disclaimer

The Apex Tool Group reserves the right to modify, supplement, or improve this document or the product without prior notice.

Trademark

Cleco is a registered trademark of Apex Brands, Inc.

Apex Tool Group

670 Industrial Drive
Lexington, SC 29072

Manufacturer:
Apex Tool Group, LLC
670 Industrial Drive
Lexington, South Carolina 29072, USA

Importers:
Apex Tool Group GmbH
Industriestraße 1
73463 Westhausen, Germany

Apex Tool Group SAS
25 Avenue Maurice Chevalier - ZI
77330 Ozoir-La-Ferrière
France

Further Document for Safety Instructions

No.	Document type
P2547BA	Instruction Manual Series Cell Clutch

CellClutch™

Nomenclature for Right Angle Head Tool

CL	B	A	*	00	0

Series

CellClutch

Power

B = Battery (18V)

Tool Style

A = Angle Head

Communication Options *

W = WiFi
- = W/O WiFi
U = Ubisense
A = Agilion

Maximum Output Torque

08 = 08 Nm
12 = 12 Nm
20 = 20 Nm
30 = 30 Nm
40 = 40 Nm

Drive Size

3 = 3/8” Square Drive

Cleco Production Tools

01

MODELS
CLBA083
CLBA123
CLBA203
CLBA303
CLBA403

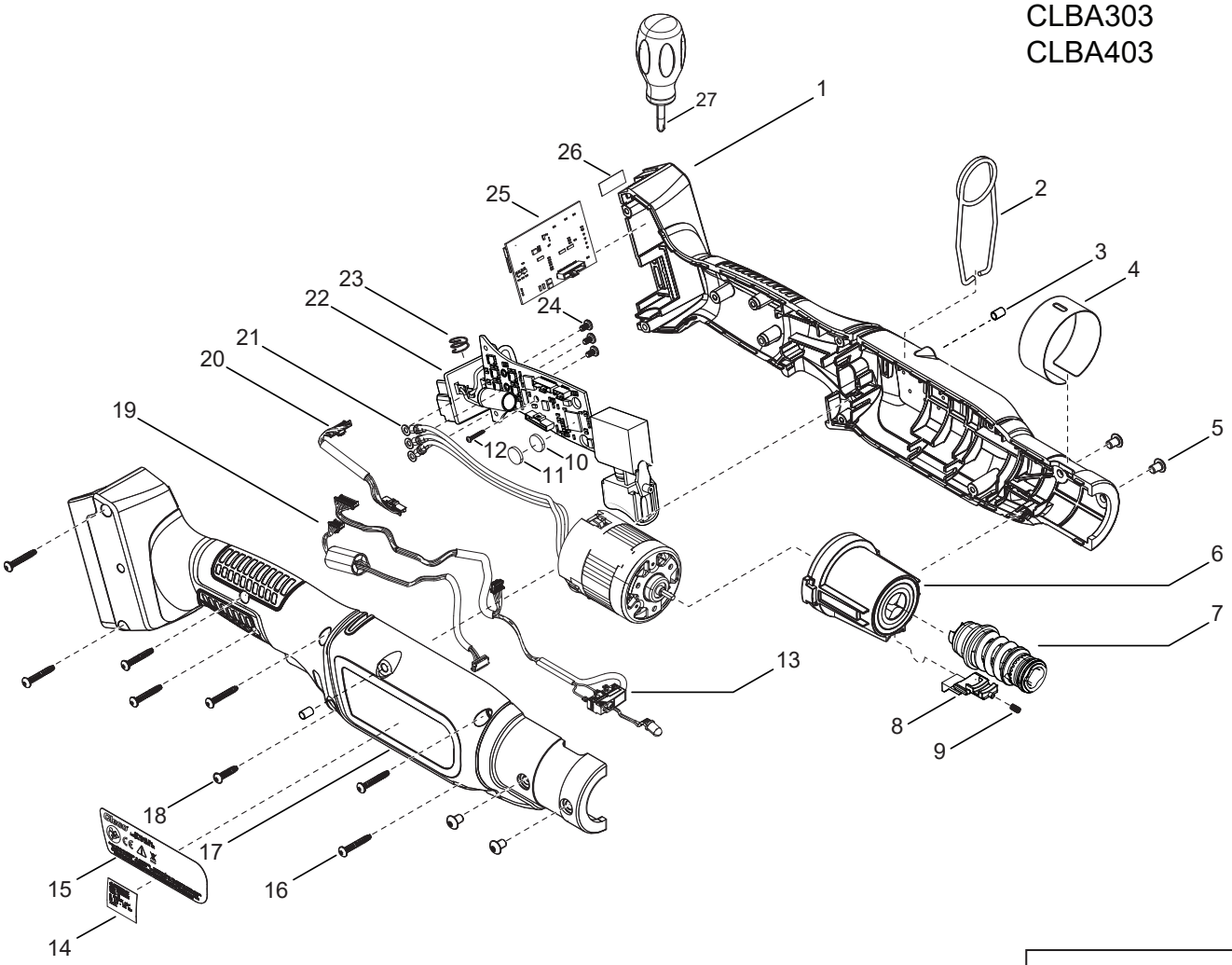

5 1.5Nm

12 1.5Nm

16 1.5Nm

18 1.5Nm

24 1.5Nm

REF	NUMBER	#	EN
			DESCRIPTION
1	T50-1000739	1	Left hand handle
2	936357	1	Bail
3	931791	2	Spring pin
4	T50-1000930	1	Adjustment cover
5	T50-1000327-2	7	Screw
6	See Pg. 11	1	Gear assembly
7	See Pg. 11	1	Clutch Assembly
8	T50-1001261	1	Clutch trip slide
9	9D6481	1	Spring
10	T50-1001408	1	Loop fastener
11	T50-1001407	1	Hook fastener
12	T50-1000933	2	Screw
13	T50-1001393	1	Wire harness
14	T50-1001180	1	Label
15	T50-1001179	1	Label
16	T50-1000744	7	Screw
17	T50-1000740	1	Right hand handle
18	T50-1000933	3	Screw
19	T50-1001392	1	Encoder
20	T50-1001011	1	USB/WiFi cable
21	T50-3000678-2	1	Motor
22	T50-3000510	1	Electronics module assembly
23	208809pt	1	Spring
24	T50-1001144-1	3	Screw
25	T50-1000919	1	USB/WiFi PCBA
26	T50-1001006	1	Label
27	204963	1	Screwdriver

= Quantity

Cleco Production Tools

02

MODELS
CLBA083
CLBA123

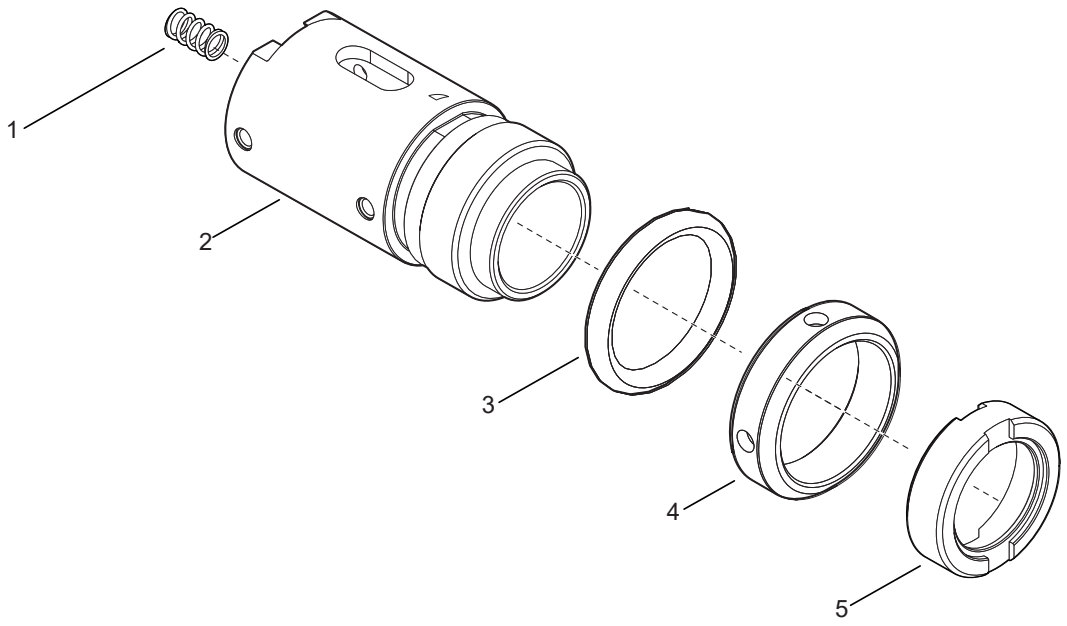

4 38Nm

REF	NUMBER	#	EN
			DESCRIPTION
1	T50-1001389	1	Spring
2	T50-1001344	1	Housing
3	T50-1000938	1	Torque Ring
4	T50-1000873	1	Jam Nut
5	T50-1001345	1	Bearing

= Quantity

Cleco Production Tools

03

MODELS
CLBA203
CLBA303
CLBA403

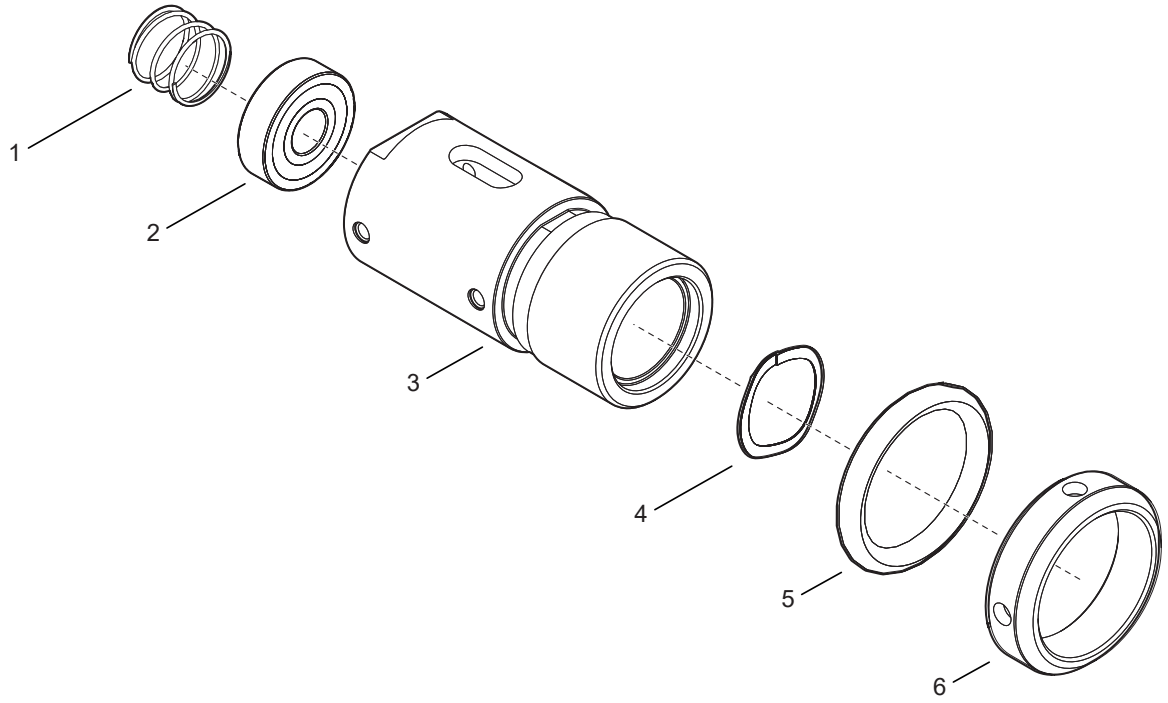

6 38Nm

REF	NUMBER	#	EN
			DESCRIPTION
1	202842PT	1	Spring
2	629353	1	Bearing
3	T50-1000878	1	Housing
4	T50-1001212	1	Washer
5	T50-1000938	1	Torque Ring
6	T50-1000873	1	Jam Nut

= Quantity

Cleco Production Tools

04

MODELS
CLBA083
CLBA123
CLBA203
CLBA303
CLBA403

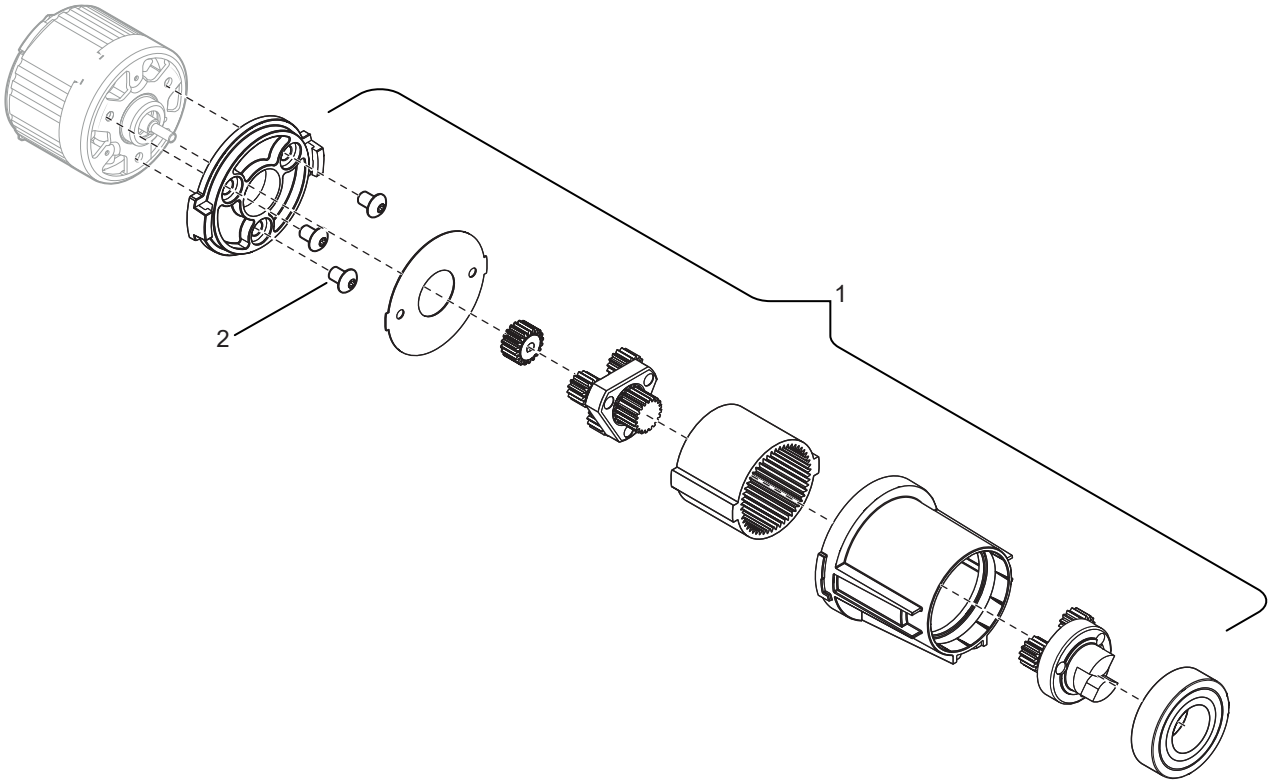

2 1.5Nm

REF	NUMBER	#	EN
			DESCRIPTION
1	See Table 1	1	Gear Assembly
2	T50-1000327-2	3	Screw

= Quantity

TABLE 1							
REF	DESCRIPTION	#	CLBA*083	CLBA*123	CLBA*203	CLBA*303	CLBA*403
1	Gear Assembly	1	T50-3000405	T50-3000406	T50-3000407	T50-3000408	T50-3000405

= Quantity

Cleco Production Tools

05

MODELS
CLBA083
CLBA123
CLBA203
CLBA303
CLBA403

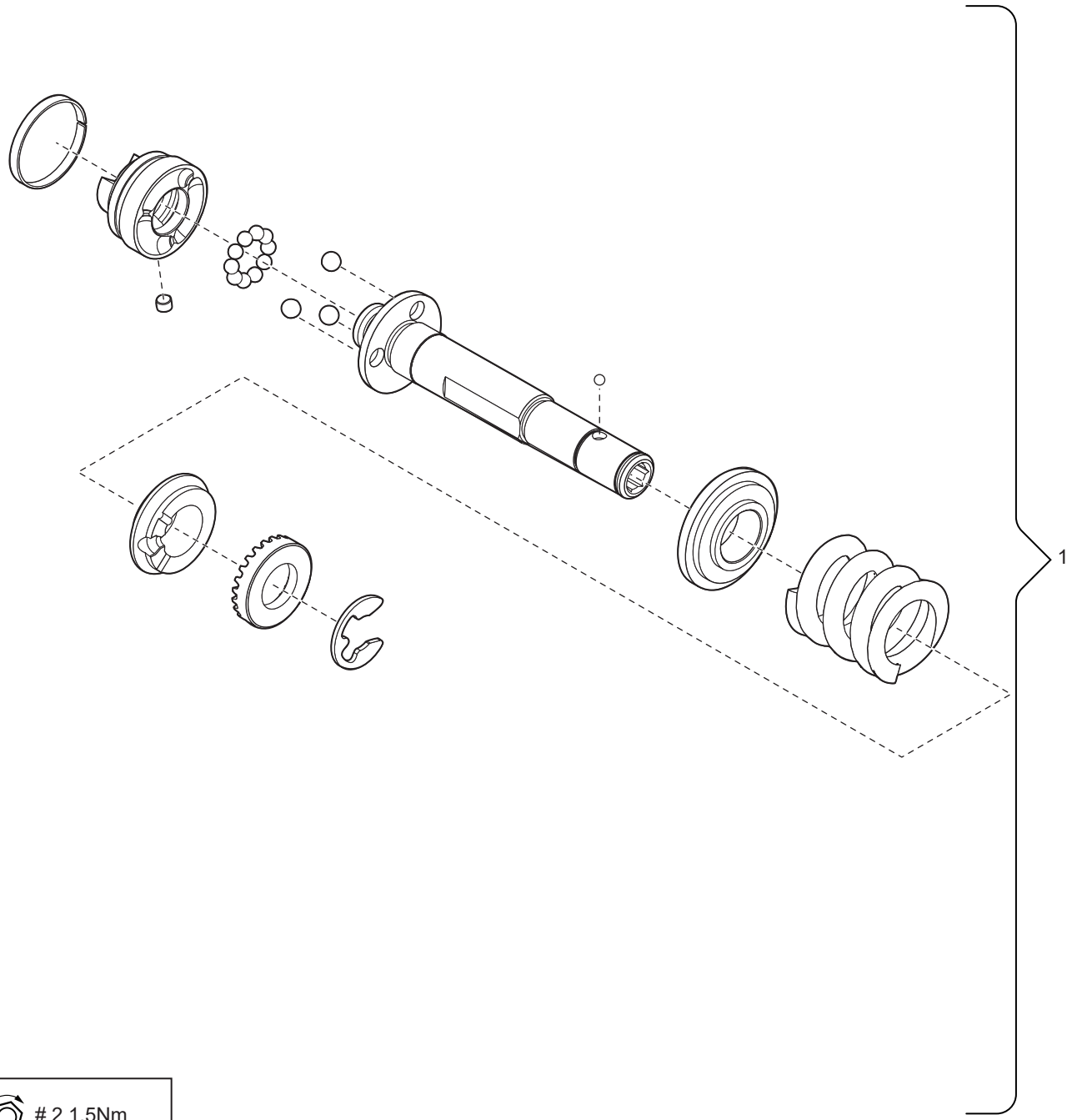

2 1.5Nm

REF	NUMBER	#	EN
			DESCRIPTION
1	See Table 2	1	Clutch Assembly

= Quantity

TABLE 2							
REF	DESCRIPTION	#	CLBA*083	CLBA*123	CLBA*203	CLBA*303	CLBA*403
1	Clutch Assembly	1	T50-3000415	T50-3000416	T50-3000415	T50-3000415	T50-3000415
---	Spring	1	T50-1001166-1	T50-1001166-2	T50-1001166-1	T50-1001166-1	T50-1001166-2

= Quantity

Cleco Production Tools

06

MODELS
CLBA203
CLBA303
CLBA403

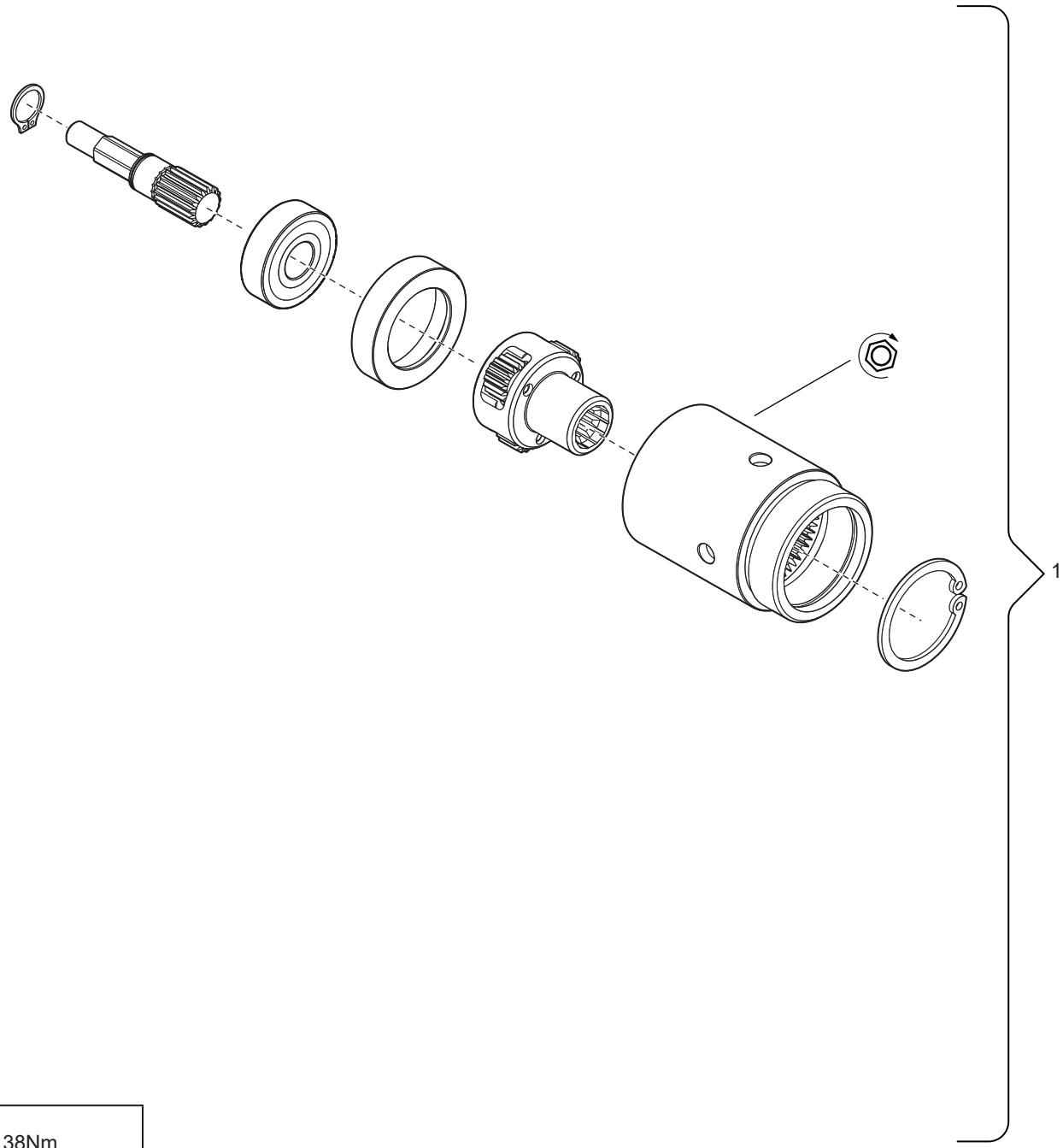

38Nm

REF	NUMBER	#	EN
			DESCRIPTION
1	T50-3000410	1	Gear Assembly

= Quantity

Cleco Production Tools

07

MODELS
CLBA083
CLBA123

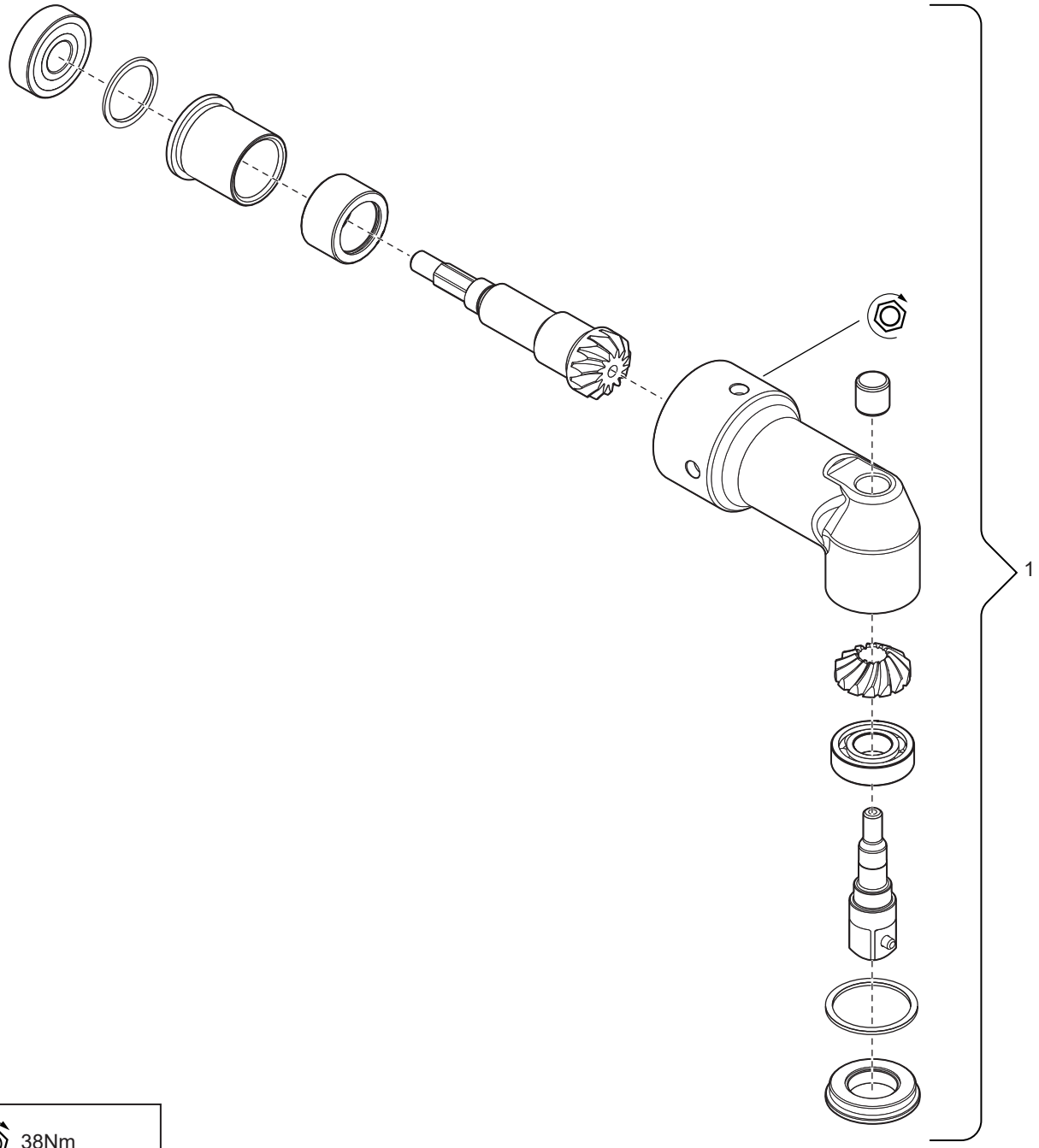

38Nm

REF	NUMBER	#	EN
			DESCRIPTION
1	T50-3000709	1	Right Angle Assembly

= Quantity

Cleco Production Tools

08

MODELS
CLBA203
CLBA303

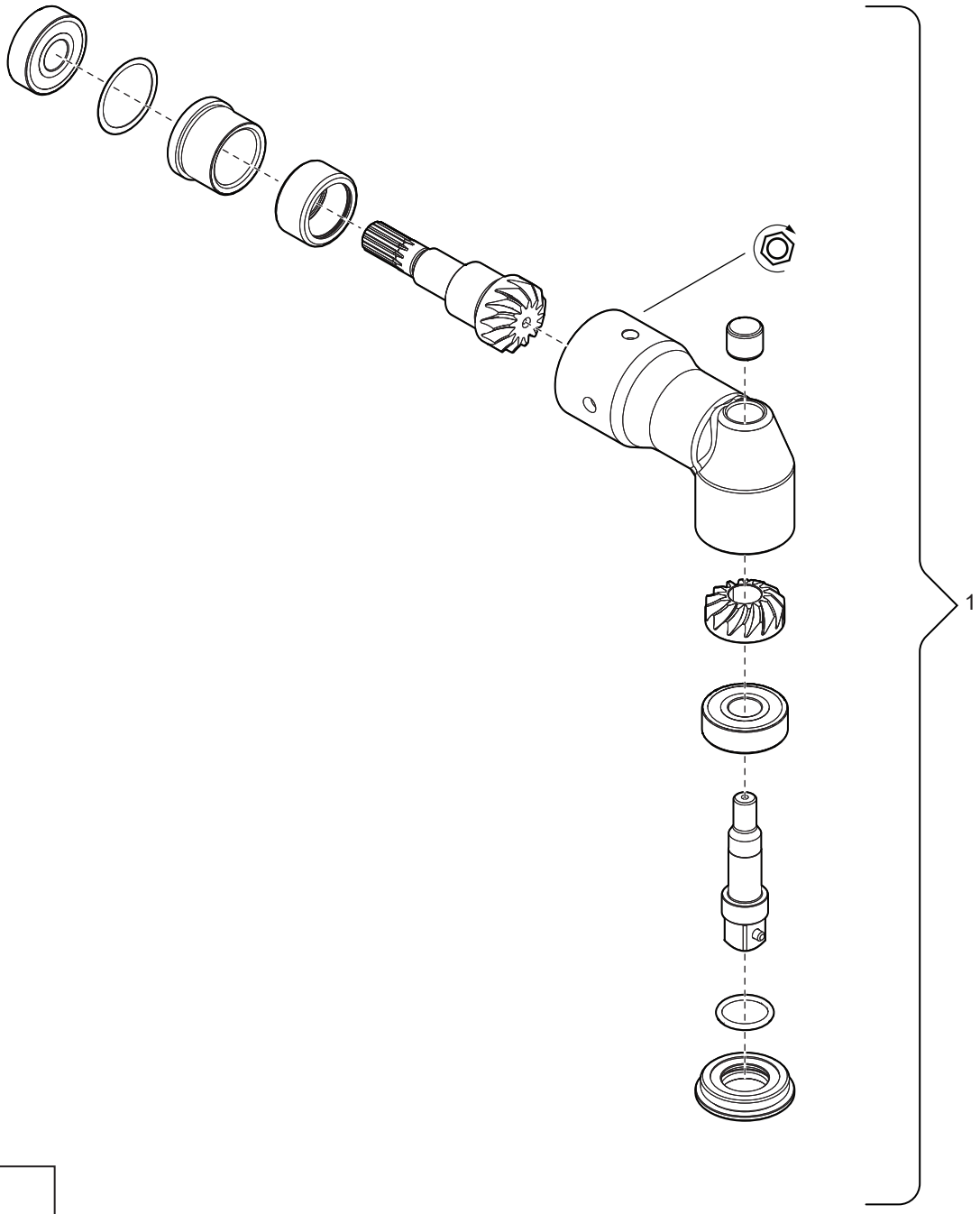

38Nm

REF	NUMBER	#	EN
			DESCRIPTION
1	T50-3000710	1	Right Angle Assembly

= Quantity

Cleco Production Tools

09

MODELS
CLBA403

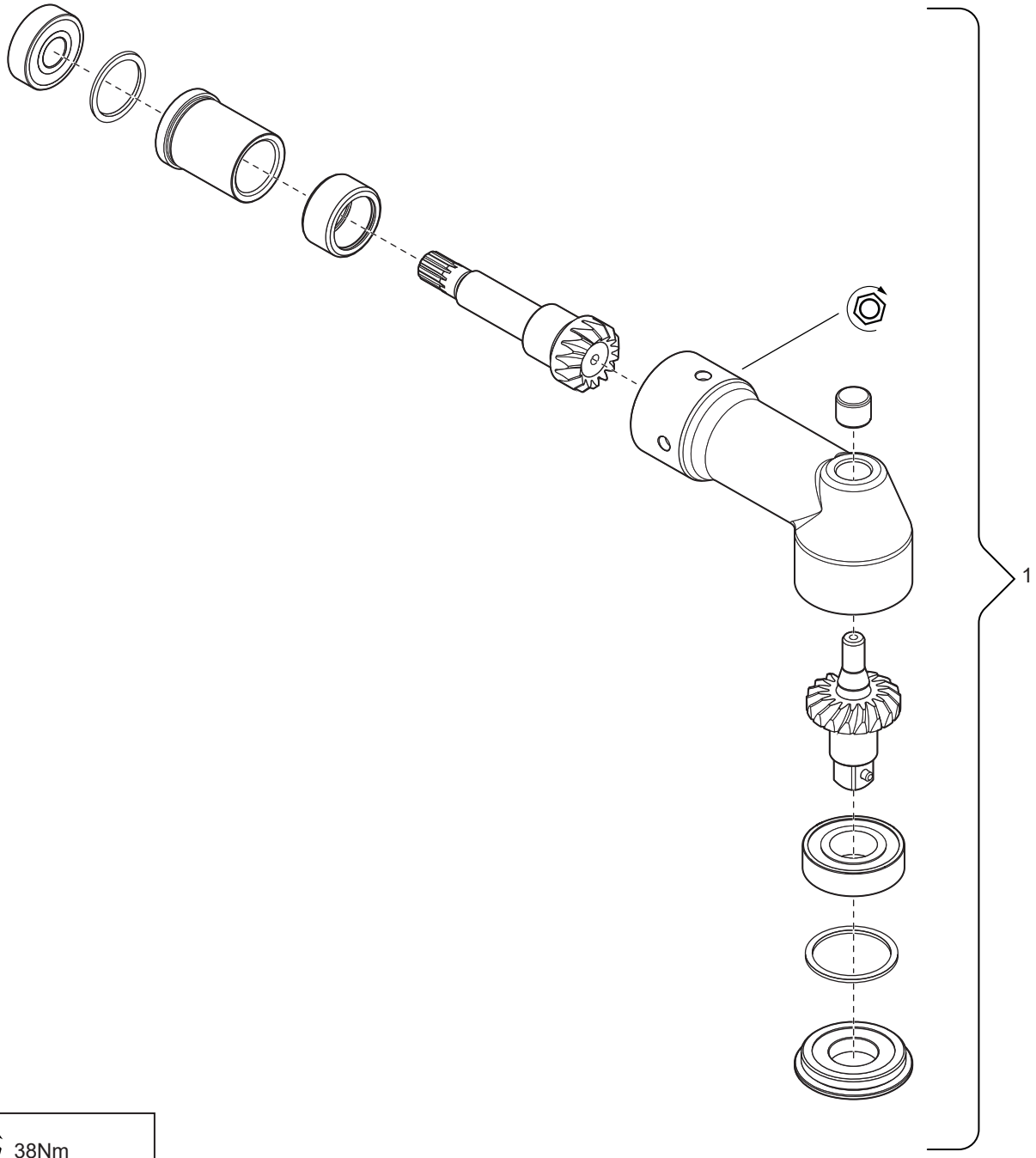

38Nm

REF	NUMBER	#	EN
			DESCRIPTION
1	T50-3000711	1	Right Angle Assembly

= Quantity

10	CELLCLUTCH RIGHT ANGLE ACCESSORIES
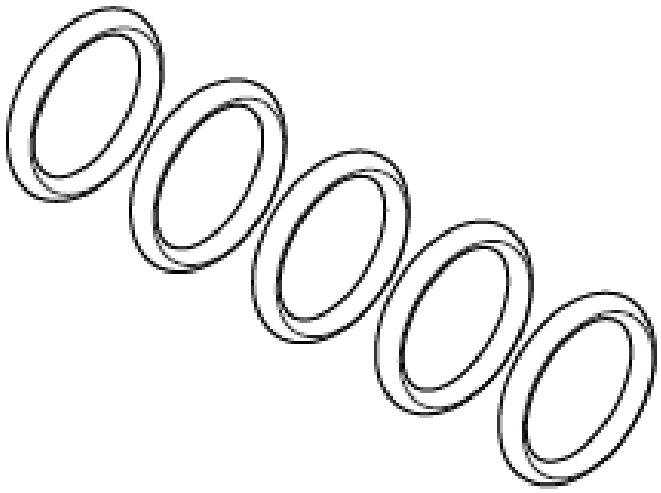	
T50-3000705-X	

CELLCLUTCH RIGHT ANGLE TORQUE ID KIT - T50-3000705-X							
DESCRIPTION	**#**	**BLACK**	**RED**	**BLUE**	**YELLOW**	**GREEN**	**GRAY**
Torque ID Kit	5	T50-3000705-1	T50-3000705-2	T50-3000705-3	T50-3000705-4	T50-3000705-5	T50-3000705-6

= Quantity

POWER TOOLS SALES & SERVICE CENTERS

Please note that all locations may not service all products.
Contact the nearest Cleco® Sales & Service Center for the appropriate facility to handle your service requirements.

Sales Center
Service Center

NORTH AMERICA | SOUTH AMERICA

Detroit, Michigan
Apex Tool Group
2630 Superior Court
Auburn Hills, MI 48236
Phone: +1 (248) 393-5644
Fax: +1 (248) 391-6295

Lexington, South Carolina
Apex Tool Group
670 Industrial Drive
Lexington, SC 29072
Phone: +1 (800) 845-5629
Phone: +1 (919) 387-0099
Fax: +1 (803) 358-7681

Mexico
Apex Tool Group
Vialidad El Pueblito #103
Parque Industrial Querétaro
Querétaro, QRO 76220
Mexico
Phone: +52 (442) 211 3800
Fax: +52 (800) 685 5560

Brazil
Apex Tool Group
Av. Liberdade, 4055
Zona Industrial Iporanga
Sorocaba, São Paulo
CEP# 18087-170
Brazil
Phone: +55 15 3238 3870
Fax: +55 15 3238 3938

EUROPE | MIDDLE EAST | AFRICA

England
Apex Tool Group GmbH
C/O Spline Gauges
Piccadilly, Tamworth
Staffordshire B78 2ER
United Kingdom
Phone: +44 1827 8727 71
Fax: +44 1827 8741 28

France
Apex Tool Group SAS
25 Avenue Maurice Chevalier - ZI
77330 Ozoir-la-Ferrière
France
Phone: +33 1 64 43 22 00
Fax: +33 1 64 43 17 17

Germany
Apex Tool Group GmbH
Industriestraße 1
73463 Westhausen
Germany
Phone: +49 (0) 73 63 81 0
Fax: +49 (0) 73 63 81 222

Hungary
Apex Tool Group
Hungária Kft.
Platánfa u. 2
9027 Györ
Hungary
Phone: +36 96 66 1383
Fax: +36 96 66 1135

ASIA PACIFIC

Australia
Apex Tool Group
519 Nurigong Street, Albury
NSW 2640
Australia
Phone: +61 2 6058 0300

China
Apex Power Tool Trading
(Shanghai) Co., Ltd.
2nd Floor, Area C
177 Bi Bo Road
Pu Dong New Area, Shanghai
China 201203 P.R.C.
Phone: +86 21 60880320
Fax: +86 21 60880298

India
Apex Power Tool India
Private Limited
Gala No. 1, Plot No. 5
S. No. 234, 235 & 245
Indialand Global
Industrial Park
Taluka-Mulsi, Phase I
Hinjawadi, Pune 411057
Maharashtra, India
Phone: +91 020 66761111

Japan
Apex Tool Group Japan
Korin-Kaikan 5F,
3-6-23 Shibakoen, Minato-Ku,
Tokyo 105-0011, JAPAN
Phone: +81-3-6450-1840
Fax: +81-3-6450-1841

Korea
Apex Tool Group Korea
#1503, Hibrand Living Bldg.,
215 Yangjae-dong,
Seocho-gu, Seoul 137-924,
Korea
Phone: +82-2-2155-0250
Fax: +82-2-2155-0252

Cleco®
Production Tools

Apex Tool Group, LLC
Phone: +1 (800) 845-5629
Phone: +1 (919) 387-0099
Fax: +1 (803) 358-7681
www.ClecoTools.com
www.ClecoTools.de

0120 | Cleco® is a registered trademark of Apex Brands, Inc. | © 2019